Diritti riservati All rights reserved

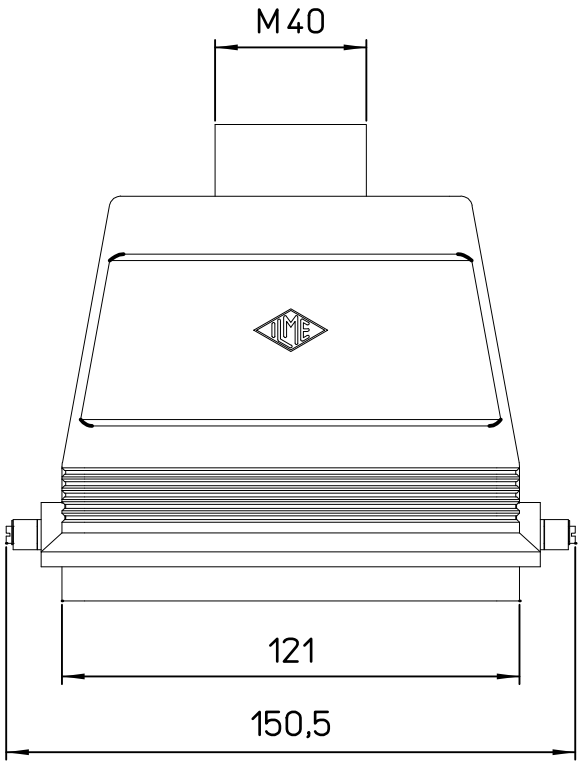

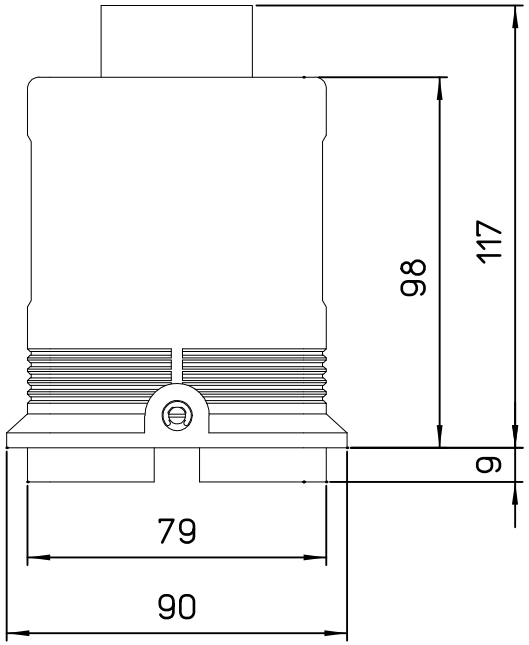

dimensions in mm	MHV 48 L40	Scale
Date 14/12/06	hood top entry M40	1:2
Sign.		